Savannah Bifold Dimensions

Manufactured by

kd frames

394 Dairy Pak Rd. • Athens, GA 30607
kdframes.com • alan@kdframes.com

#7211 Queen
#7212 Full
#7250 Mission Arms

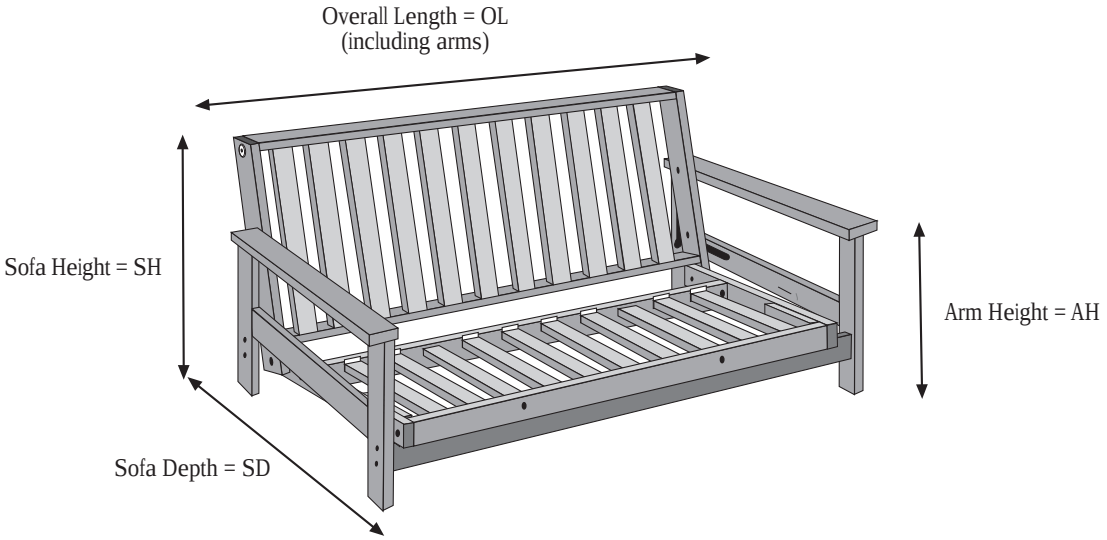

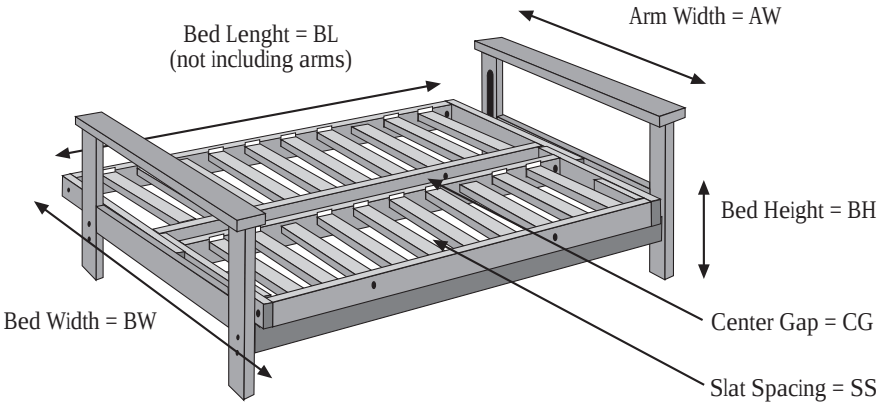

DIMENSIONS (in inches)

	OL	SH	SD	AH	AW	BL	BW	BH	SS	CG
Queen	85.5	35	40	21	32	79	56	12	4	4
Full	80.5	31	39	21	32	74	52	12	4.5	4